New “FiberThin” Diaphragm Cover Offers Additional Abrasion & Tear Resistance

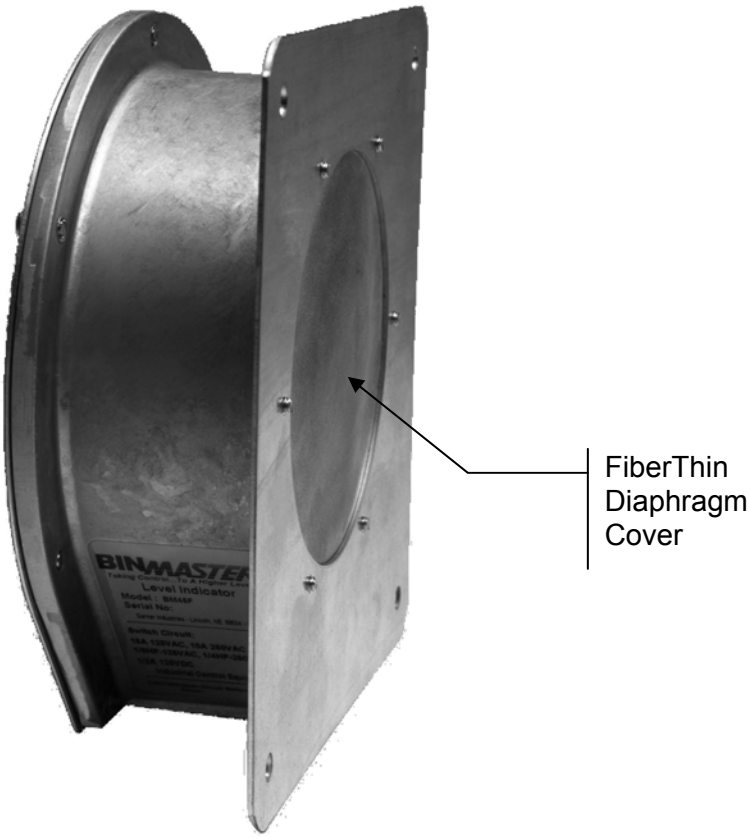

The BM65-RH & FH Diaphragm Switch have a new FiberThin diaphragm cover. Outstanding abrasion & tear resistance, excellent resistance to heat & cold, and low moisture absorption are among the most important characteristics of the new FiberThin diaphragm cover. The combination of Hypalon, Nylon, and Neoprene give FiberThin the qualities necessary for long life in harsh environments, such as those seen in grain and aggregate storage.

BINMASTER®